YORK
BY JOHNSON CONTROLS

Indoor heating resistor for VIR 25A to 90A

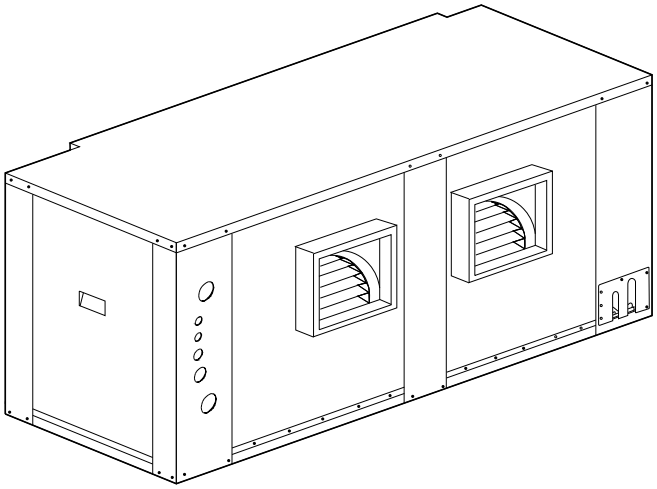

Accessory, Installation manual

Ref.: N-40298_EN 0411

Johnson Controls

Index

1

Indoor heating resistor for VIR 25A to 90A

1.1 General information

The indoor heating resistors have been designed to provide auxiliary heat or additional heat in the VIR units. Their stoppage and start-up cycles are set by the HVAC unit control system. They must be attached to the supports inside the indoor unit.

1.2 Technical specifications

The indoor heating resistors include the following components:

- Galvanised plate casing and supports.
- Heating resistors with exposed chrome-nickel wires, mounted on steatite supports.
- Auxiliary resistor control board A3 (A3 and A4 in 2 stages).
- Power contactor with 24 V coil.
- Two thermal trip switches located on the top of the resistor.
  - The first, which automatically resets, disconnects it when the temperature reaches 77 °C.
  - The second, which is accessible from the interior and is manually reset, disconnects the resistor when it reaches a temperature of 138 °C. There are four thermal trip switches in 2-stage resistors, two per stage.
- Interlocking with the indoor fan thermal relay.
  The unit control system does not enable the resistor to operate in the event of a fault in the indoor fan thermal relay.
- Switching connection cables between the board for the outdoor unit and the resistor (length 20 m).

NOTA

A connection kit for 50m is optionally available.

Model	Power supply	Power	Consumption	Stages	Circuit breaker (1) Q1	Power cable selection (2)	Front surface	Pressure drop (3)
	V.ph.Hz	kW	A		A	mm^2	m^2	Pa
VIR 25A	400.3.50	10	15	1	20	2.5	0.53	2.9
VIR 25A	400.3.50	15	22	1	25	5	0.53	2.9
VIR 40A	400.3.50	10	15	1	20	2.5	0.74	4.9
VIR 40A	400.3.50	20	30	2	40	6	0.74	4.9
VIR 45A and 60A	400.3.50	15	22	1	25	4	0.98	7.1
VIR 45A and 60A	400.3.50	30	46	2	50	10	0.98	7.1
VIR 75A and 90A	400.3.50	30	46	2	50	10	0.16	7.1
VIR 75A and 90A	400.3.50	40	60	2	80	25	0.16	7.1

NOTA

(1) K Curve (DIN, VDE 0660-104)

(2) Based on copper conductors

(3) Considering the rated air flow of the indoor selection.

1.3 Assembly

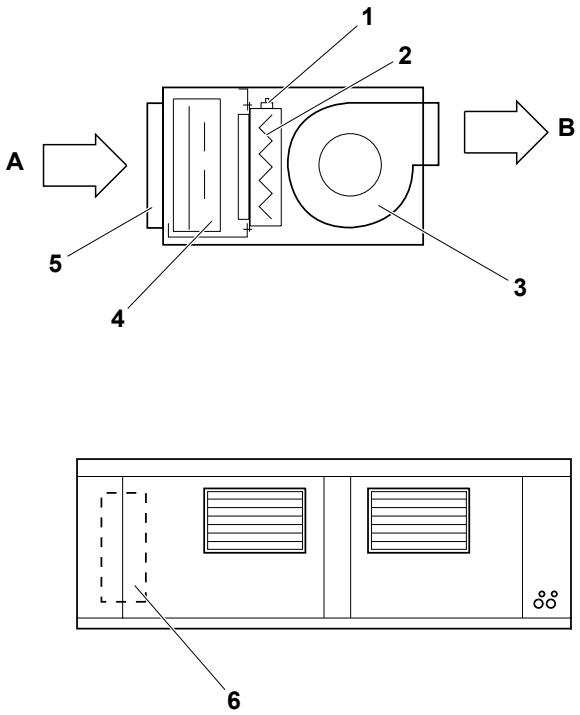

1	Position of the thermal trip switch F9, F11	A	Air from indoors
2	Indoor electric resistor	B	Air to indoors
3	Indoor fan		
4	Indoor coil		
5	Filter		
6	Electrical junction box		

1.4 General dimensions

VIR 25A

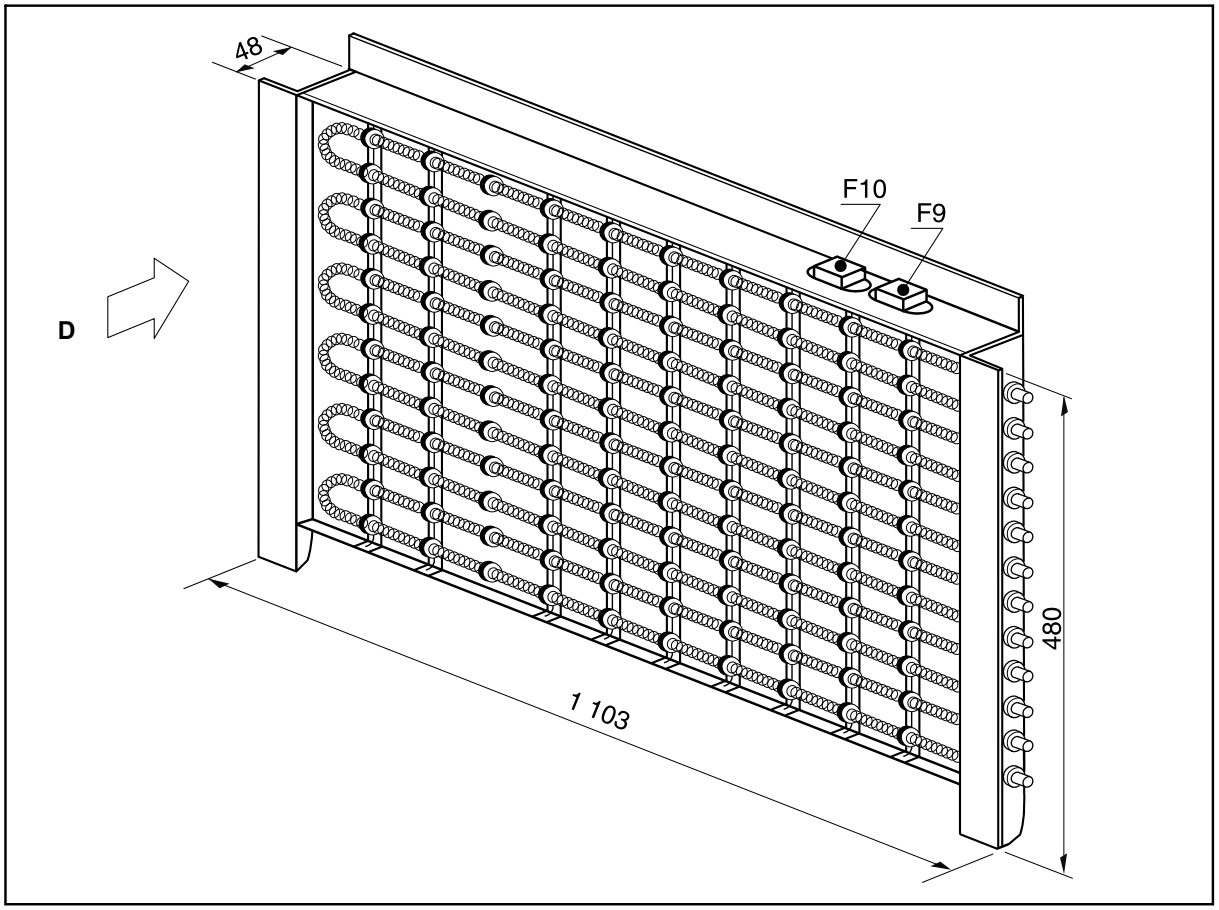

D Air flow

NOTA
Measurements in mm.

VIR 40A

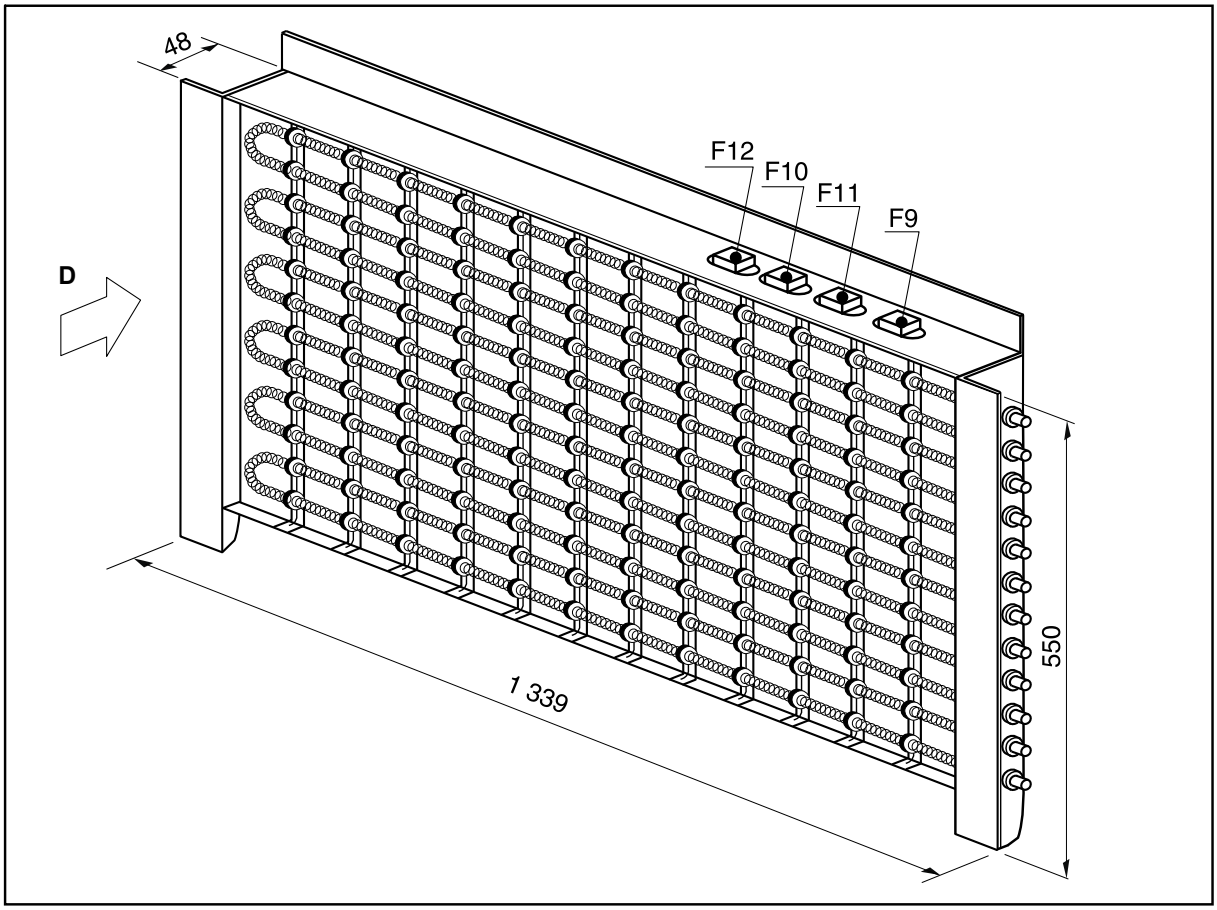

D Air flow

NOTA

Measurements in mm.

VIR 45 to 90A

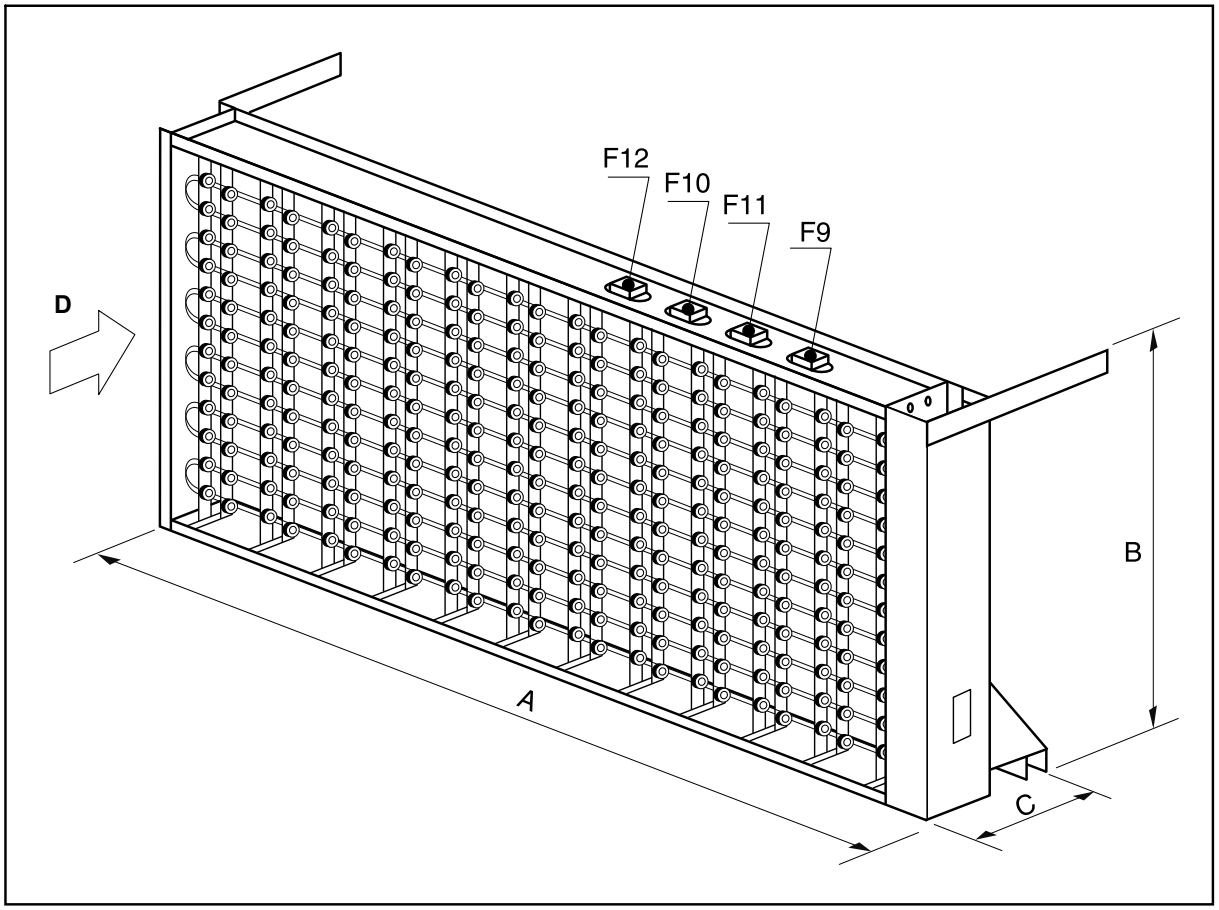

D Air flow

Model	A	B	C
VIR 45A and 60A	1160	630	116
VIR 75A and 60A	1380	700	136

NOTA
Measurements in mm.

Dimensions with packaging and weights

Model	Dimensions with packaging [mm]			Weight [kg]
	Height	Width	Depth	
VIR 25A	720	1650	180	15
VIR 40A	720	1650	180	18
VIR 45 and 60A	720	1650	180	20
VIR 75 and 90A	720	1650	180	29

1.5 Installation

PELIGRO

Loose cables can cause overheating of terminals or incorrect operation of the unit. Fire hazards may also exist. Therefore, make sure all cables are connected firmly.

Install the heating resistor in the VIR unit as follows:

ATENCIÓN

The national regulations established must be followed in all cases.

1. Disconnect the power supply to the unit.
2. Fit the thermal magnetic and residual current circuit breakers for the resistor according to the instructions of the *Technical specifications, ver pág. 2* table and *Wiring diagram, ver pág. 10*.
3. Remove the covers accessing the VCH unit controls.
4. Unpack the accessory by opening the top of the box.
   a. Check that the resistor assembly has not be damaged during transport.
   b. Check the correct condition of the ceramic insulation and that the resistor wires are not touching metal parts.
5. Remove the side covers from the VIR unit and place the heating resistor over the two vertical supports on the coil, ensuring the tab fits into the hole (VIR 25A and 40A).
   a. Position the heating resistor over the tray guide and secure the fan to the side plates and to the tray guide using the self-threading screws provided (VIR 45A to 90A).
   b. Check that the thermal trip switch F9 (F9 and F11 in two stages) reset button is accessible at the top. See *Wiring diagram, ver pág. 10*.
6. Fit the control support to the side of the unit, inside the electrical box depending on the VIR unit, and secure using the screws provided.

7. Fit the board A3 (A3 and A4 in two stages) to the electrical box of the VCH unit.

A	Location of resistor control boards A3 and A4 in the electrical box of the VCH unit

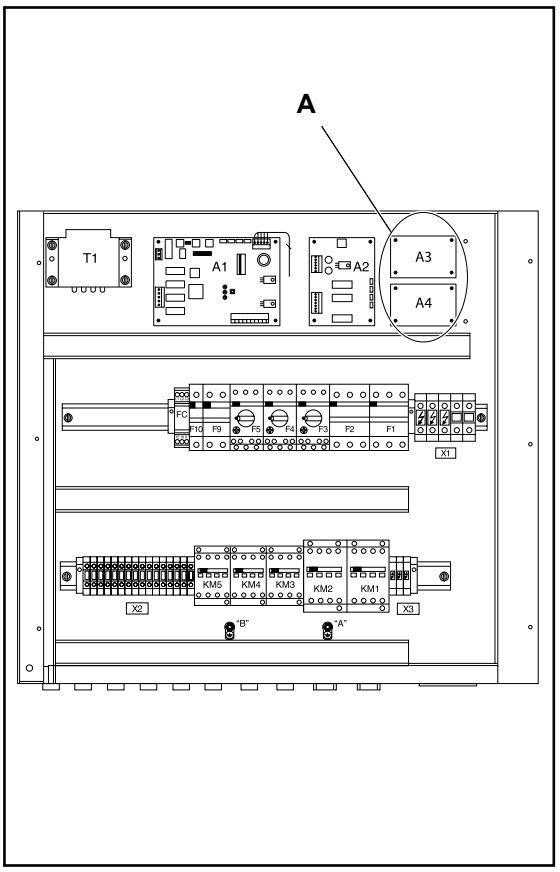

a. Then connect cables W1, W2 (W1, W2, W3 and W4 in two stages) included with the accessory between terminal strip X2 and the control boards of the VCH unit to the VIR unit.
b. Connect the power cables to terminal strip X1 of the VIR unit (circuit breaker F12 or circuit breaker F21 in two stages). See *Wiring diagram, ver pág. 10* depending on model.

A	Location of the connection and control parts for the indoor resistor accessory VIR 25A to 60A, 1 Stage
B	Location of the connection and control parts for the indoor resistor accessory VIR 40A to 90A, 2 Stages
1	Power cable connection
2	Switching cable connection

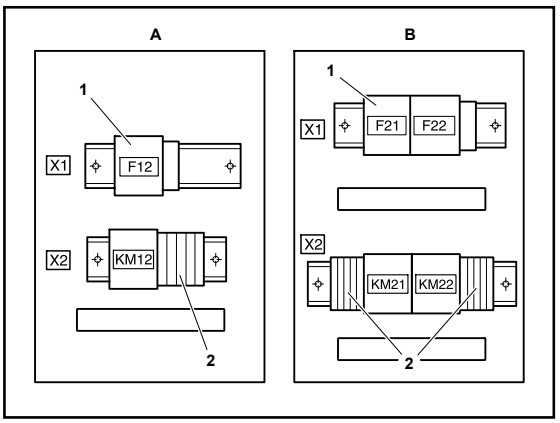

8. The fitter must complete the electrical switching of the resistor, fitting an air flow control F14 (F14 and F15 in two stages) in the most appropriate position on the ducts to ensure the resistor only works if there is sufficient air flow.
9. Connect the mains power supply to the VCH/VIR unit and to the resistor.
10. To configure the accessory, press the test button on the control board A1 for more than two seconds until the red LED on the board lights up.

    The configuration is complete when this LED switches off.

11. Check the switching and the working order of the resistor by selecting the Emergency Heat function on the air conditioning unit control ambient thermostat.
12. Fit the covers on the VCH/VIR units.

NOTA

In the event of an incorrect response from the system, see the Installation Manual for the VCH/VIR units. This gives details of the control functions of the electronic board A1 on the resistor and their configuration and the identifying of incidents, etc.

1.6 Wiring diagram

Resistor 10, 15 kW, 400.3.50 / VIR 25A, 40A, 45A and 60A

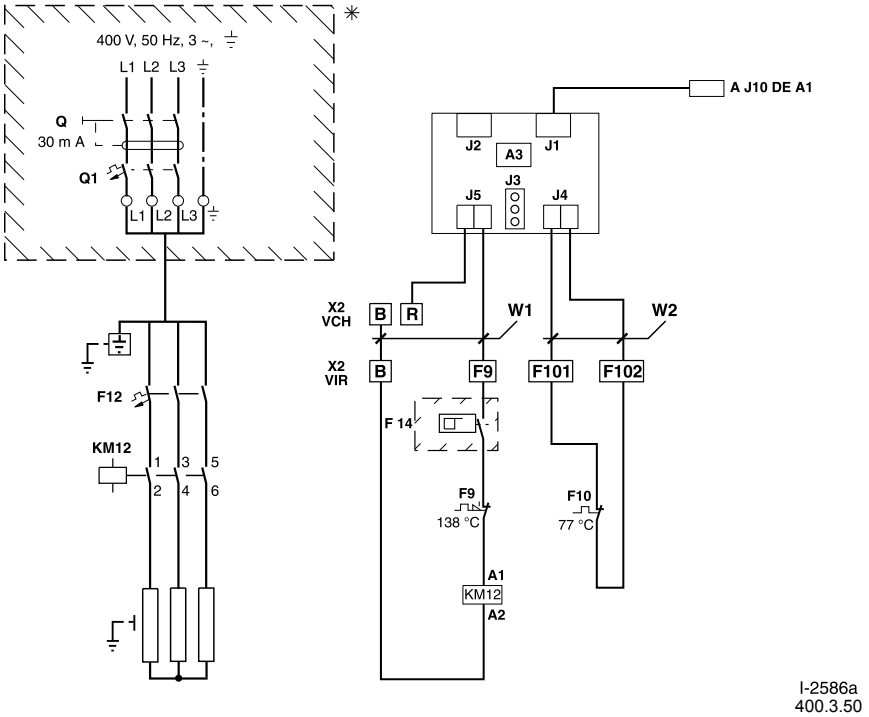

Resistor power [kW]	Q1 [A]	F12 [A]	Minimum cable cross-section [mm^2]
10	20	20	2.5
15	25	25	4

(*) The components included in these boxes are not supplied by the manufacturer

A1	Control board	F14	Air flow control
A3	Auxiliary resistor -1 accessory	KM12	Power contactor, 24 Vac coil.
F9	Manual reset thermal trip switch, 138 °C	W1	A3/F9 cable (red/white)
F10	Automatic reset thermal trip switch, 77 °C	W2	A3/F10 cable (red/red)

PRECAUCIÓN

The size of the circuit breaker and the cross-section of the power line are illustrative and must be corrected based on site conditions and current regulations.

Resistor 20, 30, 40 kW, 400.3.50 / VIR 40A, 45A, 60A, 75A and 90A

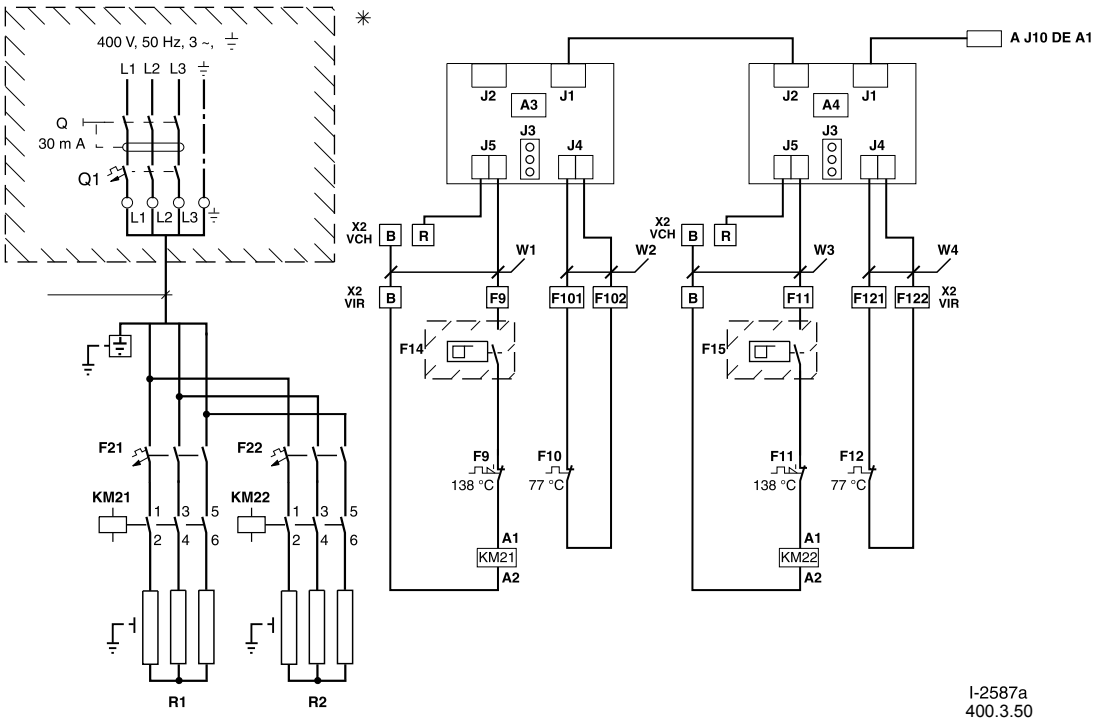

Resistor power [kW]	Q1 [A]	F21 [A]	F22 [A]	Minimum cable cross-section [mm^2]
20	40	20	20	6
30	50	25	25	10
40	80	40	40	25

(*) The components included in these boxes are not supplied by the manufacturer

A1	Control board	KM21, KM22	Power contactor, 24 Vac coil.
A3	Auxiliary resistor -1 accessory	R1	1st stage resistor
A4	Auxiliary resistor -2 accessory	R2	2nd stage resistor
F9, F11	Manual reset thermal trip switch, 138 °C	W1	A3/F9 cable (red/white)
F10, F12	Automatic reset thermal trip switch, 77 °C	W2	A3/F10 cable (red/red)
F14, F15	Air flow control	W3	A4/F11 cable (red/white)
F21, F22	Circuit breaker	W4	A4/F12 cable (red/red)

PRECAUCIÓN

The size of the circuit breaker and the cross-section of the power line are illustrative and must be corrected based on site conditions and current regulations.

Data and measurements subject to changes without prior notice.